The Australian

BIRD BANDER

The ABC of Crow Catching

IAN ROWLEY

Different designs of crow traps that have been used in Australia are described and illustrated. Their merits and demerits are discussed, together with suggestions for their efficient operation such as siting the trap, the different baits and the value of decoys. Selection of a particular trap design should be made from considerations of the need for portability, the resources available, and the likelihood of interference from large domestic stock.

Introduction

Crows of one kind or another are mentioned in the legends and literature of most civilisations and in nearly every case two aspects are similar—the black bird is cast in the role of villain and due respect is paid to his 'intelligence'. Probably for as long as sheep have been domesticated a member of the genus *Corvus* has watched from a safe distance and benefited, nutritionally, by performing the role of scavenger. Therefore the sheepman and the crow probably have been in conflict for centuries, and it is interesting that, although Australia is a relatively young country, the simple trap, which is used throughout the world for catching crows, is generally known as the 'Australian crow trap'. (Chappellier 1959; Aldous 1942; Kalmbach 1939.) The reason probably lies in the fact that the invention of wire-netting was a nineteenth century achievement and that a combination of circumstances, largely dictated by the need to restrain the rabbit, made the Australian farmer more familiar with this new material and its capabilities than his counterpart overseas and, with the ingenuity of the pioneer he soon dreamt up the crow trap.

Although crow traps have been used throughout the sheeplands of Australia for at least 60 years many graziers lack details of both their construction and their operation. There is also a growing number of bird banders who want to participate in the co-operative study of crow movements and thus to help study their ecology. It is the object of this paper to pass on the trapping experience gained, over the past five years, by a number of people who have participated in the study of the Australian Raven (*Corvus coronoides*) sponsored by CSIRO.

Types of Crow Trap

A basic crow trap consists of a netting box with a top opening (through which the birds enter) and some sort of door in one side through which the operator gains access (Figure 1a). Within these broad specifications the overall dimensions and the nature of the entry aperture vary widely depending on the resources available and the objective in view.

1. Dimensions are largely determined by consideration of: (a) cost, (b) portability, (c) strength and (d) intervals between visits.

(a) Cost: The cheapest form of trap is one built from bush timber, steel fence posts and rabbit netting. Such traps may be very strong and last a long time, but are usually immovable and so their siting needs to be carefully planned. The only size limit with such permanent traps arises from the difficulty of handling birds in a large space; at the extreme it would be necessary to construct an internal catching pen. A trap 10 ft x 8 ft (in plan) is probably the largest practical size and could be erected for less than $10.00,

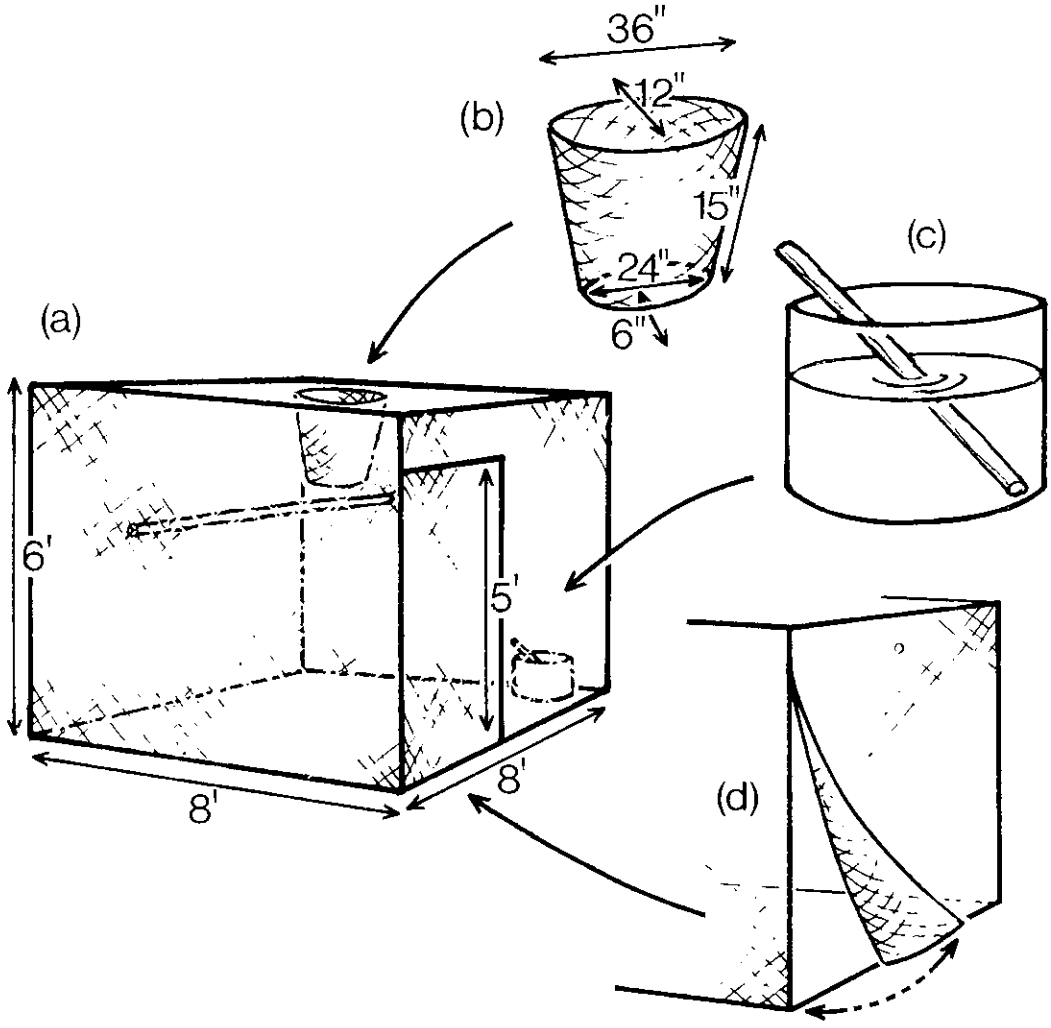

Figure 1. *The 'crow' trap at its simplest. (a) Dimensions. (b) Funnel entrance. (c) Water vessel. (d) Flap-door.*

using new materials; on most farms, second-hand posts and netting would reduce the cost still further. The equivalent portable trap with a frame welded from ¾ inch waterpipe would cost in the vicinity of $60.00 ('home-welding' would reduce costs).

(b) Portability: Permanent traps have the attraction of cheapness and strength but their immobility can be a serious disadvantage. Farmers frequently want to trap in or near lambing paddocks, the location of which may change from year to year; bird banders may want to exploit the arrival of a nomadic flock; both need to be able to move their traps on occasion.

Portability is not simply a matter of convenience in handling. Permanent traps in which carcases are used for bait become increasingly foul as the season advances, and although this putrifying mass probably does not deter the birds at all, it makes working in the trap extremely unpleasant. Further, the nature of the trap prohibits stock from grazing the area enclosed by it and once spring growth starts the inside of the trap rapidly becomes obscured by grass and bait is less visible and therefore less attractive.

The upper size limit of a portable trap is largely determined by the strength necessary in the structure and will be dealt with in the next

section. The smallest practicable trap, and one that I have used successfully for several years to trap resident pairs of ravens in population studies, is illustrated in Figure 2. These traps have frames welded from ¼ inch steel reinforcing rod and are covered with wire netting of 2 inch mesh; they weigh 10 kg (22 lbs) and fold flat for transport so that four can be carried easily on the roof rack of a car. The dimensions represent the largest size from which birds can be removed by reaching an arm through the top (entry) aperture, thus dispensing with the need for a door (see Plate 1).

Between these two limits dimensions are dictated by the need for a man to get inside the trap and grab the captive birds (six feet of head room is advisable) and the need for one person to shift the trap easily; traps near to a man's weight-lifting capacity are easily dropped and damaged, even if no worse accident occurs.

(c) Strength: The considerable weight and ruggedness of most crow traps are necessary not because the birds might escape by force, but because of the frequent presence in the same paddock of cattle or horses, both of which have an insatiable curiosity about anything new in their environment. Besides their inquisitive investigation, these animals frequently rub against traps in order to ease an itch; traps, unless solidly built, will soon disintegrate under such treatment.

Where only sheep are run no such problem arises and the usual heavy framework can be replaced with ¼ inch reinforcing rod. The man using the trap then becomes the main danger, since these structures squash fairly easily and their length of life depends on how gently they are handled (see Plate 2). Peter Disher has successfully used this sort of trap for several years on his property, placing it over naturally-occurring carcases on which the birds are accustomed to feeding already. Such traps larger than 6 ft cube

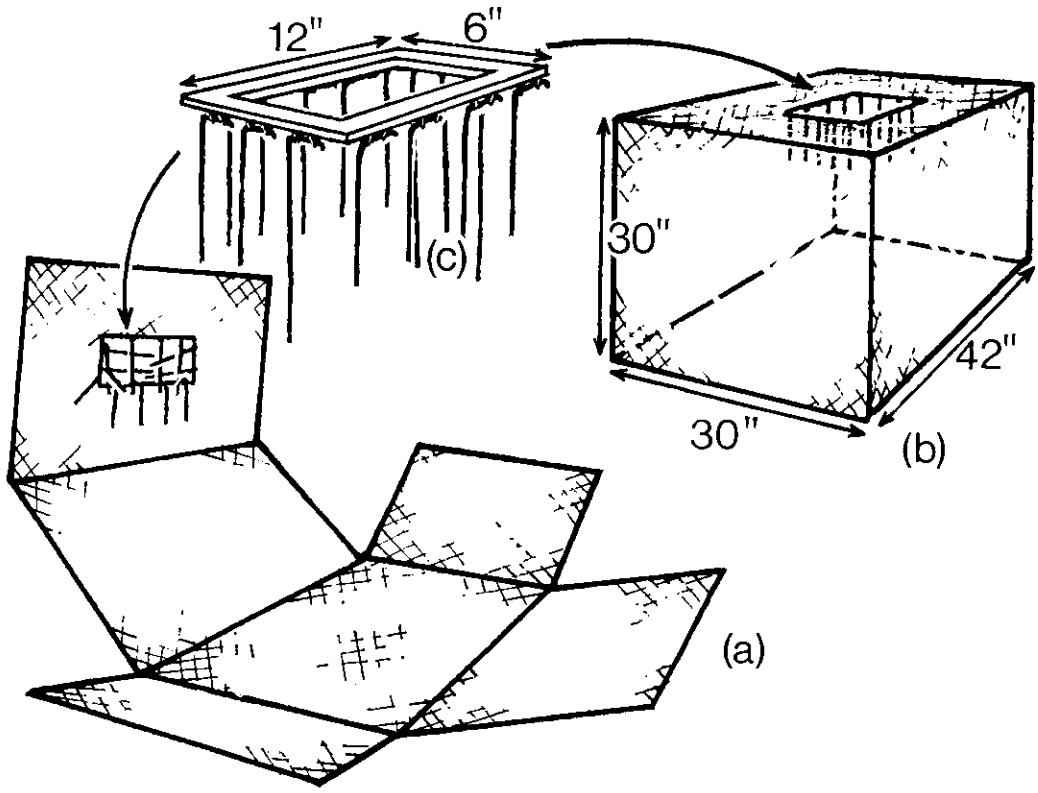

Figure 2. *Small collapsible crow trap. (a) Location of 'hinges'. (b) Dimensions. (c) 'Danglers' as used by Disher (see text).*

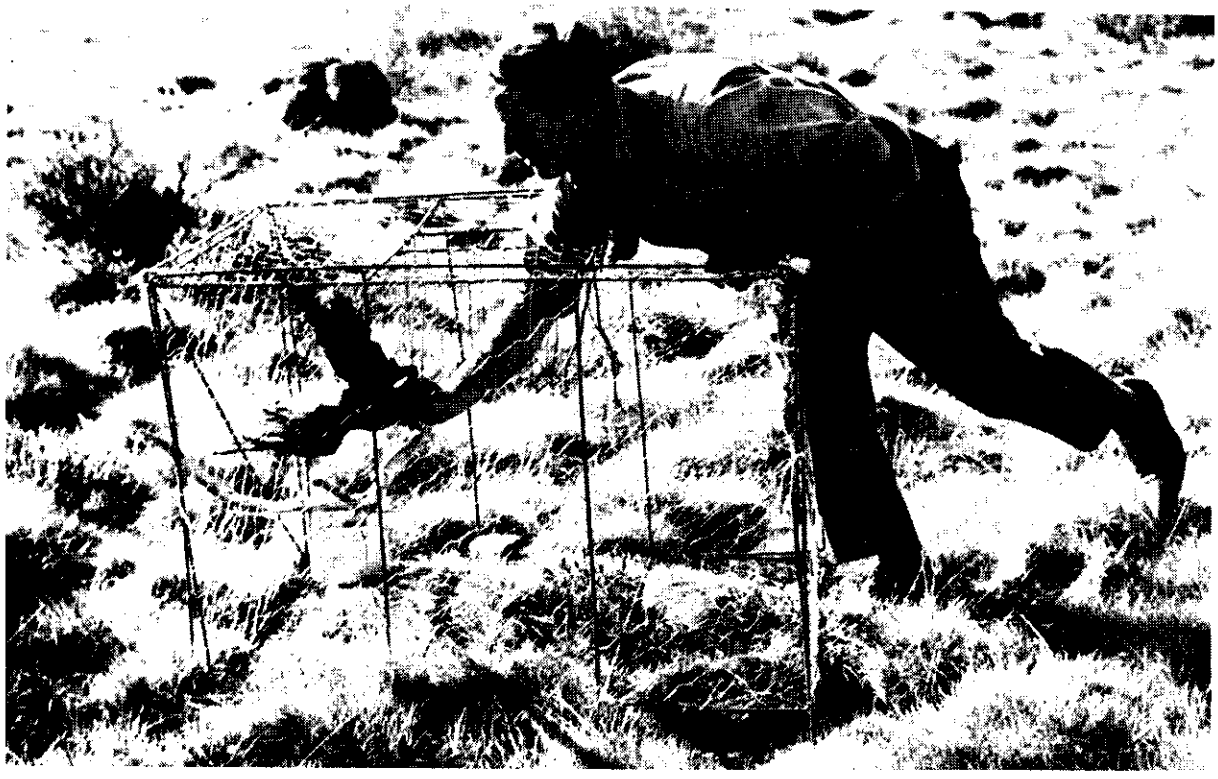

Plate 1. *Removing a bird via the aperture; trap as illustrated in Figure 2.*

are not recommended, as they lack sufficient rigidity.

(d) Interval between visits: Very small traps of the type shown in Figure 2 will catch crows. However, there is obviously a limit to the number that can be trapped at one time and in such a trap we have never caught more than two, which, plus the decoy, make three occupants. Most birds dislike being in close contact with others of their species and maintain what is known as an 'individual distance' from them; if this distance is encroached upon either the bird moves away from, or else it attacks the intruder. Many birds feed in flocks and several crows may feed from the same carcase; such birds are usually spaced out according to this 'individual distance' which commonly results in some squabbling at limited food supplies. It follows from this that for a trap of any particular dimensions there will be an optimum number of birds which will 'catch' before the trap is full, so that other things being equal one might suppose that the bigger the trap the greater the success.

Size is limited by considerations of weight, strength, and portability discussed above. Catching success can be increased by regularly clearing the trap so that it is not left full when it might otherwise be catching birds (see Plate 3). On the other hand the less a trap is disturbed the more likely it is to appear innocuous and to catch crows. As a compromise, traps should be inspected daily from a distance of at least half a mile (with field glasses), and approached closer only if necessary; size can then suit the convenience of the operator. Where visits must be at longer intervals, the largest practicable traps (bearing in mind the considerations listed above) are recommended.

Tradition has it that traps should be serviced only after dark to avoid scaring other crows away. Our experience does not support this and in practice it is seldom done for obvious reasons of convenience.

2. Entry aperture: The opening through which crows must pass to get into the trap is the most important part of the whole design. The problem is not how to get the birds to enter but how to

stop them getting out again via the same route. In the simplest form a hole is cut in the roof netting and left at that; not surprisingly many birds escape, but some people consider this is made up for by more getting in.

Next in order of complexity is the 'ladder' entrance, so called because in structure it is like a ladder laid horizontally to form a grill. This construction not only frames the entry aperture rigidly but provides convenient perches from which the birds can drop down into the trap. The two outermost spaces of the ladder are usually netted in whilst three or four are left open in the middle (see Figure 3).

Both the ladder and the simple hole allow escapes. Until recently the usual remedy for this has been to fasten a funnel of wire netting, hanging like a skirt, round the opening (see Figure 1a and 1b). Whilst this stops most losses some birds have been seen to scramble out after clutching the lower rim; one female feeding nestlings managed to get up sufficient momentum in the trap by springing up, to close her wings and scramble up the funnel. She did this repeatedly, feeding her nestlings on the food we provided for the decoy!

The only truly escape-proof trap that I have come across is that designed by Jack Hood (see Figure 4), which consists of a basic cube trap but with a special entrance compartment centrally placed on the roof. This compartment has a delicately counterbalanced floor to which especially attractive bait is fastened. The crow enters the compartment to take the bait and his additional weight is sufficient to tilt the floor thus dropping him into the trap proper. The floor returns to its previous horizontal position once the crow's weight is removed and the main body of the trap is once more completely closed. This trap certainly catches a lot of crows and has been in regular use for several years, but unless one is an expert 'home welder' (as Jack Hood is), the cost of such a trap could be prohibitive.

Another ingenious crow catcher and bander, Peter Disher, hung a frill of specially shaped wires round the entrance (see Figure 2c); these

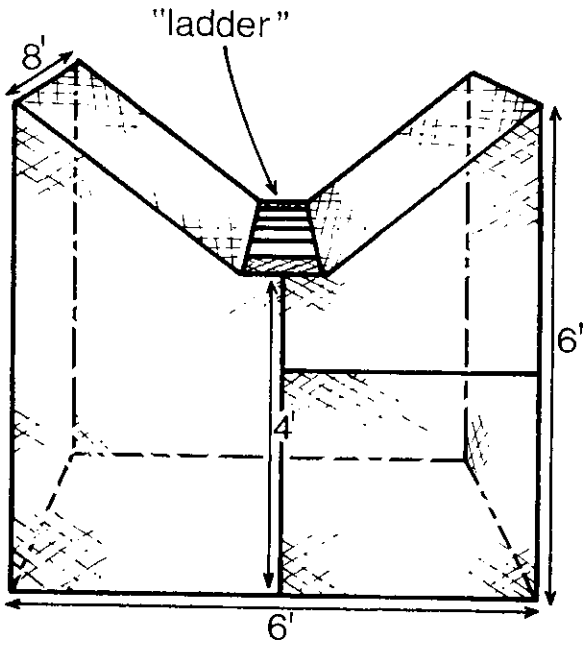

Figure 3. *Alternative design with 'ladder' entrance. Birds may escape from such a trap and the addition of a funnel or 'danglers' then so lowers the head room that catching birds in the confines of the top becomes very frustrating (after Woodbury, 1961)*

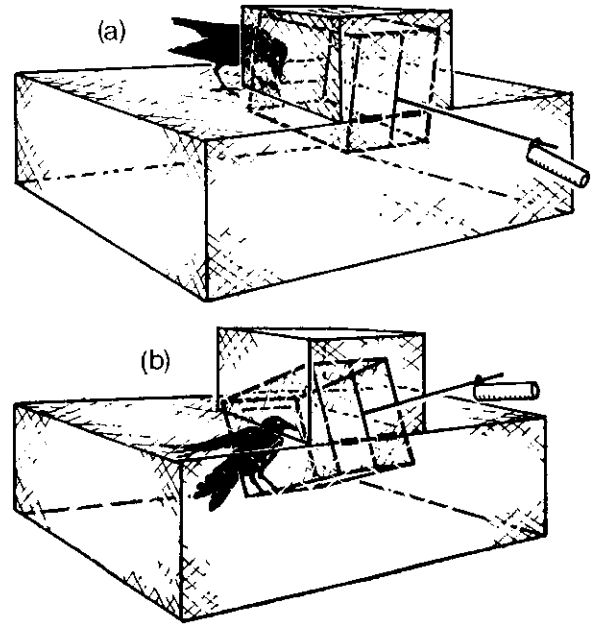

Figure 4. *Hood's escape-proof model. (a) 'Set' position. (b) Bird being tipped into the trap. The size of the main body of the trap has been reduced for convenience of illustration.*

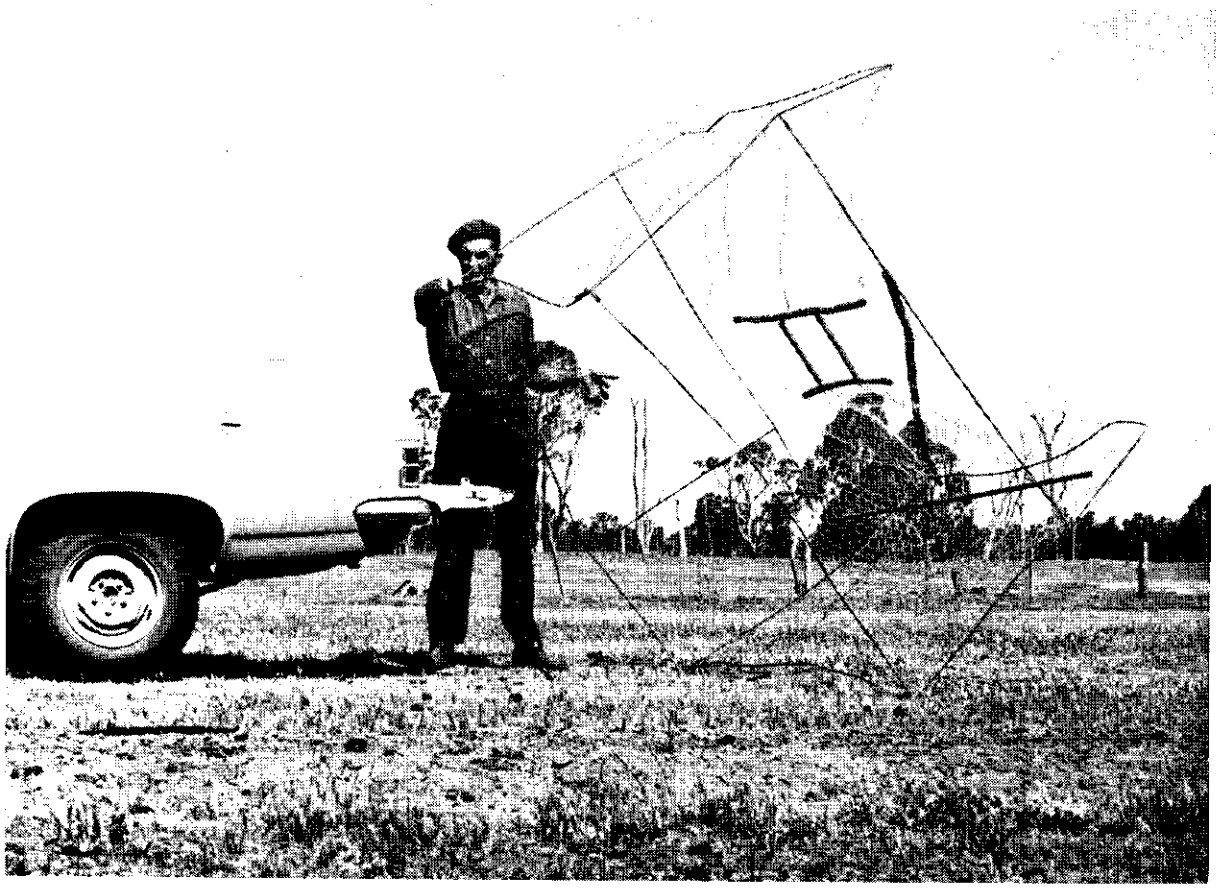

Plate 2. *Peter Disher lifting his lightweight crow trap on to a utility; this trap is set over a carcase at which crows are already feeding. Only sheep graze the paddocks where this trap is used.*

move to allow a bird to push past on the way in but are sufficiently long to block the aperture if a bird tries to escape. The right-angle attachment to the aperture frame stops the wires being pushed sideways. We have tried these 'danglers' extensively and to our knowledge have never had an escape. Particularly with our small portable traps, we have dispensed with the more elaborate method of anchoring the danglers, and we use free hanging wires that can swing through 360° and find these quite adequate.

Overseas, the use of funnel entrances at ground level is often recommended (Anon, 1953). These are not suitable for Australian conditions because several unwanted species readily enter by this route (particularly magpies, *Gymnorhina spp.*) and both foxes and cats may force their way in and eat the birds in the trap.

The Operation of a Crow Trap

Bait: All four species of the crow family in Australia are omnivorous, and a preliminary analysis of more than 1,500 stomachs has shown that although insects make up by far the largest part of their diet, grain, carrion, fruit, vegetables, and domestic refuse also figure largely. Live prey, such as mice, small lizards, nestling birds, and weakly lambs are also eaten, but less frequently, since these birds are essentially scavengers. The availability of these different foods varies with the season and locality and the baiting of crow traps must be done with this in mind.

Grain and meat are available as bait all the year round, but meat is a far better bait in winter when it remains fresh and conspicuously gory for weeks on end; in the summer it rapidly dries up or putrefies. Whether fruit becomes an eco-

nomic proposition as crow bait depends on the proximity of orchards with worthless windfalls, or on the disposition of the local greengrocer who may have spoilt items to dispose of occasionally. Fruit and stale bread when available can be valuable additional attractions to grain, which otherwise must remain the standard summer bait. Crows appear to prefer oats to wheat.

Site: The trapping of nomadic flock crows (as opposed to resident breeding pairs) can be undertaken in two ways. Either the operator locates a flock and sets his trap on their feeding ground or else he uses a site regularly favoured by crows which may be trapped continuously or just as opportunity arises. The method used largely dictates the bait to be placed in the trap. If the flock has already located a food supply then the operator must create, within the trap, feeding conditions which are even more attractive than those outside. This is usually done by creating a local abundance as distinct from the scattered distribution of items in the natural environment, for example, baiting with a pile of lamb carcases in a lambing paddock, or with a bucket full of oats on a harvested stubble. In other words, maximum use is made of the birds' attraction to an item of food on which they are already feeding naturally.

A permanent trapsite is best located at a place that is frequently visited by crows in the course of their nomadic foraging. Abattoirs, piggeries, and garbage tips are often profitable sites but where these are not available a conspicuous dead tree near a watering place can be nearly as good, since crows need a lot of water and drink several times a day. To trap successfully at these places one must offer the birds something even more attractive than the item which has already brought them there; quantity is not enough. Timing may be important, especially if the 'natural' food source is provided at intervals of several days. For example, when a small abattoir kills only once a week it would be logical to bait the trap freshly the day before slaughtering takes place, when the birds might be expected to be hungry.

Decoys: Almost as old as the cow trap itself is the recommendation that a captive bird be left in the trap to act as a decoy. So far as a resident pair of birds is concerned, this decoy is an intruder violating their territory and is consequently attacked. For the flock birds the decoy helps to assuage their natural suspicion and since flock feeding is largely a competitive affair the presence of another bird feeding while they are not, probably provides a strong attraction to the outsider. Certainly the decoy is a tremendous help to crow trapping, especially if it calls frequently.

The decoy, after living for several days in the confined space of a crow trap, tends to become dirty and bedraggled, and its feathering may become extremely worn by frequent contact with the netting. In addition to humanitarian reasons it is sound sense to replace the decoy bird at regular intervals. However, some birds may tame to a remarkable degree after being used as decoys, seldom trying to escape and living the life of a normal cage bird without detriment to health or plumage. Such individuals of course are worth retaining as permanent decoys.

On this subject it is worth mentioning that one of my colleagues, Dr G. van Tets, found that placing a number of ping-pong balls in the trap proved very attractive to crows when he was trapping them on Mascot airfield. These inanimate 'decoys' may have stimulated the birds as if they were eggs, a favourite item of their diet. China or plastic 'dummy' eggs used in domestic poultry farming, are also effective attractions.

Water: Crows drink a lot. Not only do they need to drink several times a day, but they like to dunk their food in water before eating it; they also appear to 'hide' surplus food in the bottom of the water container, and to bathe frequently. These considerations and the fact that large numbers of birds may be caught on red letter days, means that the water container should be large enough to supply all requirements and to allow a considerable margin for evaporation during hot weather. Half a four-gallon drum makes an adequate trough and one that is cheap, easy to clean and not readily upset. A thick branch projecting from the water container allows the birds to continue drinking as the water level falls; it also enables a bird that falls in to climb out (see Figure 1c).

The importance of water to crows means that traps should be checked at least twice a week—more often in hot weather.

Perches: Perches not only provide places for the birds to roost, but also keep them away from the funnel in the critical moments before they are grabbed and keep the bait from becoming fouled with droppings, especially if there is a big catch. The perches should run the full width of the trap and be half way between the roof and the ground; they should be at least 12 inches from the sides of the trap to minimise damage to the feathers by contact with the netting.

The easiest way to fix the perches is to wedge them into the netting at each end, i.e., cut the poles a little on the long side, notch the ends and force them in. However, it is advisable to reinforce these places since trapped crows frequently develop a nervous, fidgeting hop on the perch and this almost continuous motion, especially if there are several birds in the trap, tends to break the netting where the pole bears down and may cause a hole large enough to escape through. This is especially likely to happen with permanent traps and those made from lightweight netting, commonly called 'chicken netting'.

The hopping pattern described above and the fact that the birds are frequently in contact with fatty carcases, means that with time the perches achieve quite a polish, and become quite slippery; they should then be replaced.

Shelter: Depending on the time of year and situation of the trap, cold winds and hot sun can cause severe distress to trapped crows. In winter the trap should be placed in the lee of shelter if it is available and if this doesn't make the trap too inconspicuous; in windy weather birds appear reluctant to plunge down the funnel. A sack, split open and wired around one corner of the trap, will provide shelter in an exposed site. Fresh leafy branches over one corner of the roof will likewise provide some shade in summer and will help to disguise the shape of the trap.

Handling the Trapped Birds

First catch your bird! It is quite amazing how easily four or five birds the size of a crow can evade capture in a crow trap. This probably largely accounts for the strange array of weapons found in farmers' crow traps—old cricket bats,

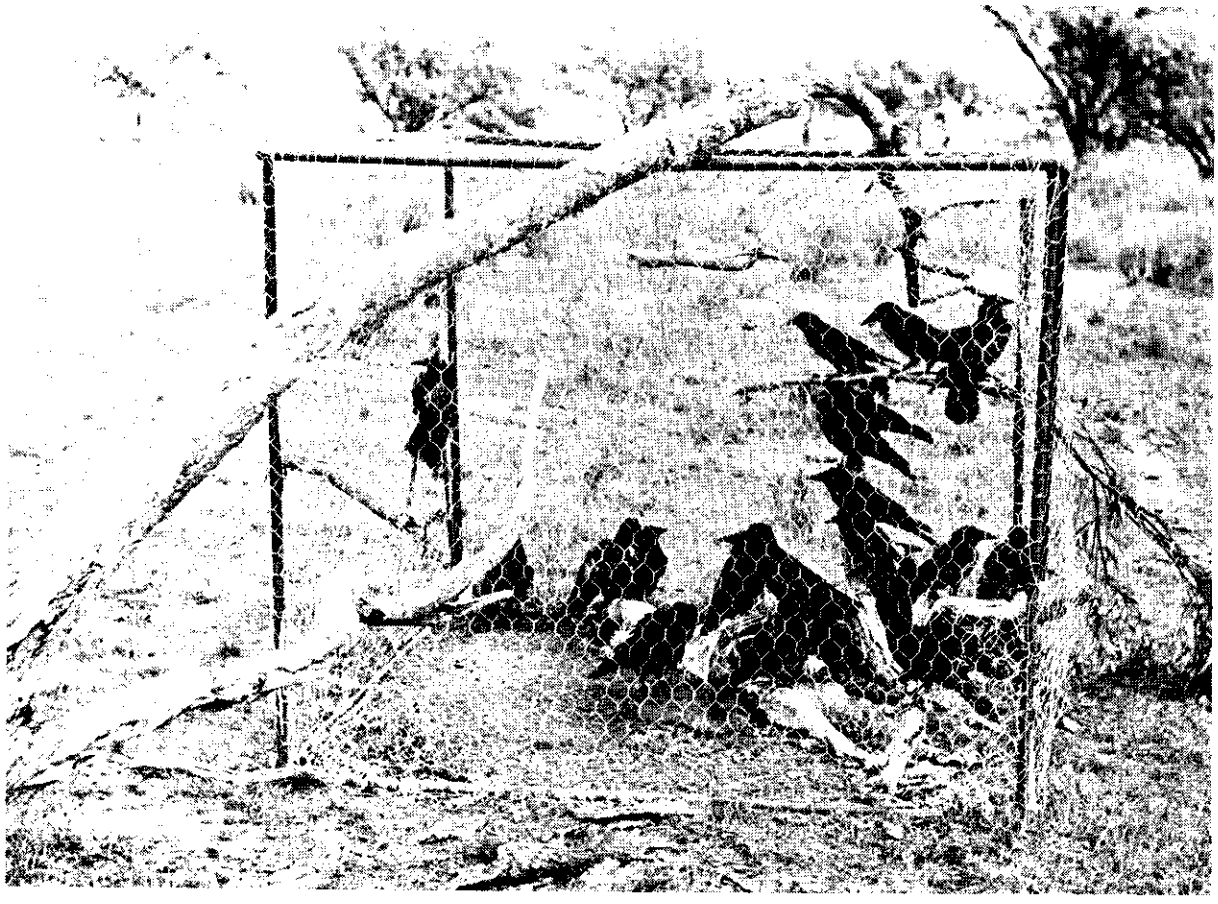

Plate 3. *This trap is ready for emptying; if these birds are left in for several days the bait will become fouled and unattractive and few more crows will enter.*

discarded golf irons, and even a fairly new baseball bat! A modified fisherman's landing net with the purse shortened to a depth of 12 in. saves both time and temper; one soon learns to leave the snags remaining from wire tying on the outside (where, for the birds' sake, they should be anyway). If a net is not available, a wire hook, after the style of a shepherd's crook and about 5 ft long, serves the same purpose, but is less manoeuvrable.

Despite the dagger-like appearance of a crow's bill, it is very rarely used in a thrusting attack (as opposed to the way currawongs, *Strepera spp.*, use their bills), and gloves are unnecessary when handling them. They will seize flesh, usually the softest and tenderest, between their mandibles, and may even break the skin as their pinching bill is withdrawn; usually only a blood blister results. Obviously the easiest way to handle the bird during banding operations is to put it in a bag, leaving the feet sticking out. However, one is often handling a lot of birds in a day and such a bag becomes increasingly dirty and unpleasant so that other methods are sometimes useful. As with most banding, two people make a better job of it than one and the problem of holding scarcely arises. When a bander is alone and inside the trap, Jack Hood's method of thrusting the bird's head into the netting, bill first, while the band is put on, is most effective and is clearly demonstrated in the film 'Bird-banding in Australia' made by CSIRO. Alternatively the bird may be grasped around the legs with the right hand and its head placed between the bander's left upper arm and body, with the bird's abdomen uppermost; the bird's legs and primaries are then transferred to the left hand, leaving the right hand free for putting on the band.

Finally, the banding of nestling crows is often rewarding, especially where large numbers of Little Ravens (*C. mellori*), or Little Crows (*C. bennetti*), breed, since they usually nest quite close to the ground. However, it should be remembered that mortality in the nest is often high and it is advisable to band only those nestlings which have their body feathers showing (more than 15 days old). It is important to be especially careful when removing chicks from the nest because they cling tenaciously to the lining and their young claws are easily damaged.

The larger 'crows', *C. coronoides* and *C. orru*[1], remain in the nest for about six weeks and *C. mellori* for a little over five weeks, while *C. bennetti* may fledge as soon as 30 days after hatching. To prevent premature departure from the nest, nestlings should not be banded within a week of fledging.

(1) Peters' Check List (*cecilae* of the Australian Checklist 1926).

References

Aldous, S. E. (1942), 'The White-necked Raven in Relation to Agriculture', *U.S. Fish and Wildl. Res. Rpt.* No. 5, 1-56.

Anon (1953), 'Winged Vermin Control. Interim notes'. I.C.I. Game Services, England. 1-22.

Chappellier, A. (1959), 'Les Corbeaux de France, et la Lutte Contre les Corbeaux Nuisible', Société de Zoologie Agricole, Talence. 1-107.

Kalmbach, E. R. (1939), 'The Crow in its Relation to Agriculture', *U.S.D.A. Farm. Bull.* No. 1102, 1-21.

Woodbury, C. J. (1961), 'Local Control of Crows by Trapping', *J. Agric. W.A.* 2 (4th ser.): 33-35.

Ian Rowley,
CSIRO, Division of Wildlife Research,
Canberra, A.C.T.

NEW MEMBERS

Associate Members

CLARKE, G., Peglers Barn, Bledington, Kingham, Oxon, England.

GORKAY, A. L., Stony Kill Rd, Canaan, New York, U.S.A.

KING, G. V., 3/16 Belgrave St, Waverley, N.S.W.

McGRATH, F. A., 45 Barrat St, Smithfield Plains, S.A.

SMITH, Mrs A. J., 84 Arabella St, Longueville, N.S.W.

Junior Members

BAUER, P., Day St, The Rock, N.S.W.
BOLTON, R. G., 151 Vale St, Cooma, N.S.W.
DEMMERY, P., 26 Clinton St, Orange, N.S.W.
HOLMES, G., 173 Bridges Rd, New Lambton, N.S.W.

Change of Status

The following member has been advanced to Full Membership.
PRIOR, M. F., 15 Latrobe St, Mentone, Vic.